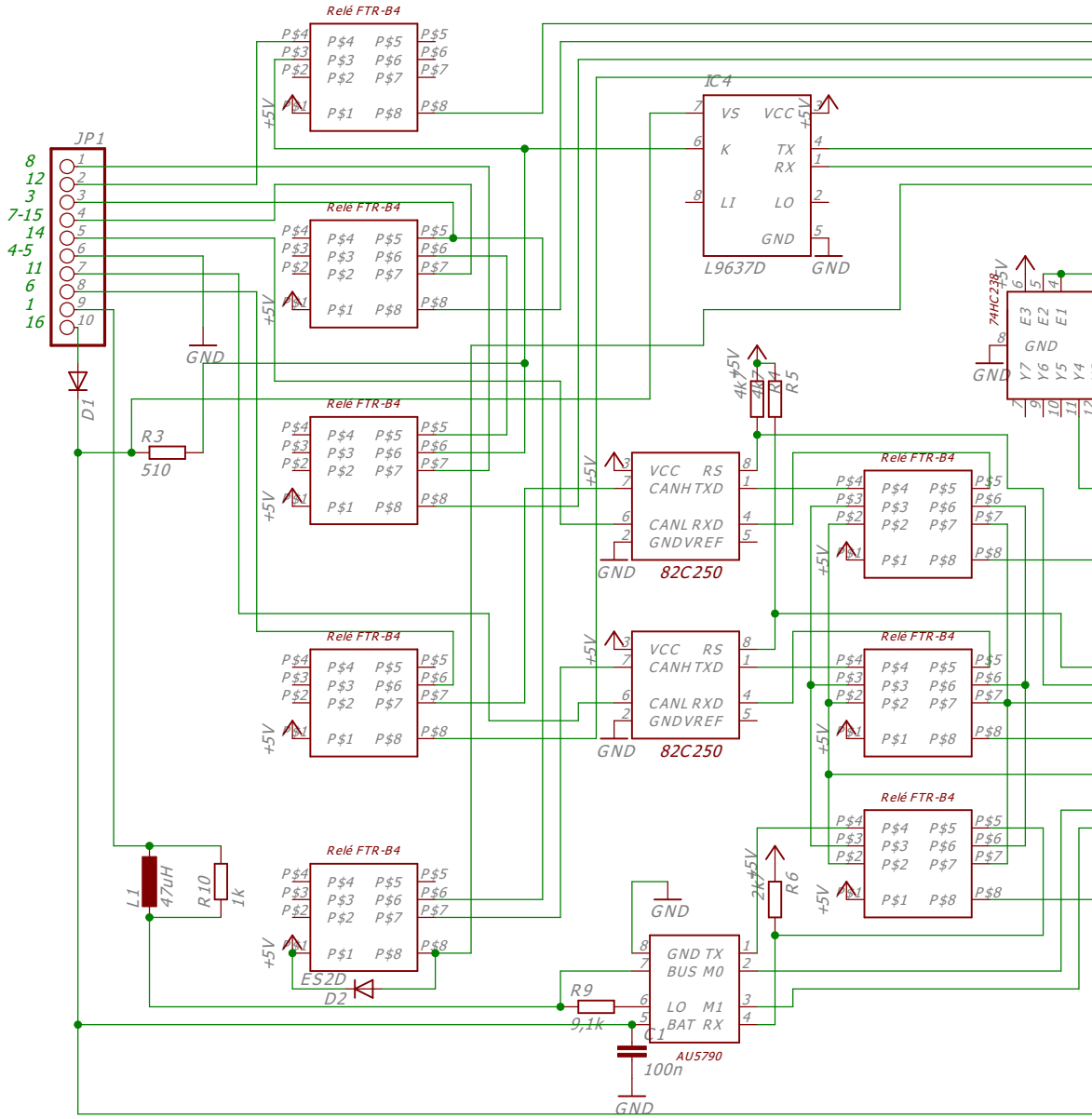
JP1
8
12
3
7-15
14
4-5
11
6
1
16
D1
R3
510
GND
L1
47uH
R10
1k
Relé FTR-B4
P$1
P$2
P$3
P$4
P$5
P$6
P$7
P$8
+5V
ES2D
D2
IC4
VS
VCC
K
TX
RX
LI
LO
GND
L9637D
74HC238
E3
E2
E1
Y7
Y6
Y5
Y4
VCC
RS
CANH
TXD
CANL
RXD
GND
VREF
82C250
4k7
R4
R5
R6
R9
9,1k
C1
100n
GND
TX
BUS
M0
M1
BAT
AU5790

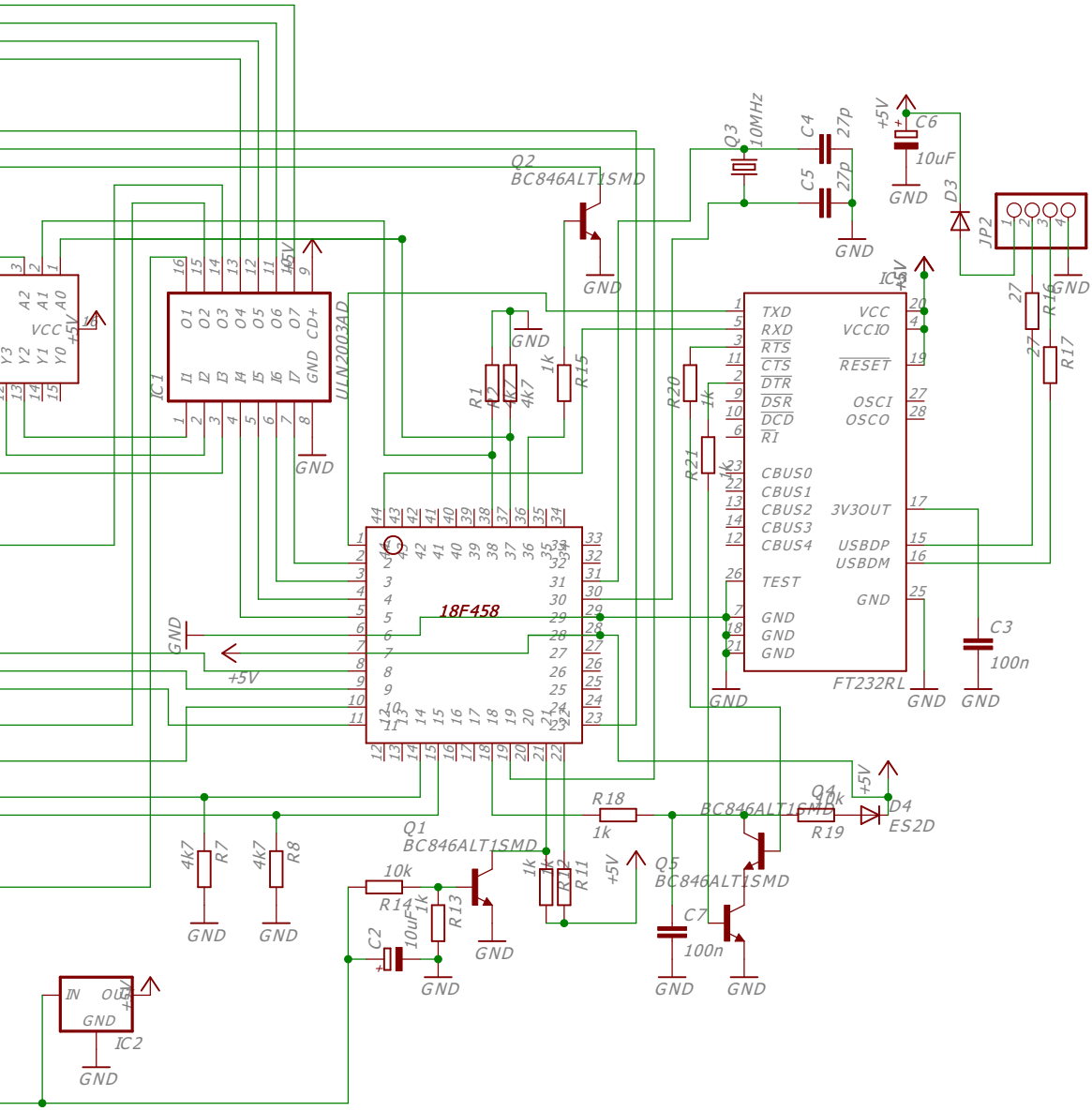
ULN2003AD
IC1
18F458
FT232RL
IC3
Q1
BC846ALT1SMD
Q2
BC846ALT1SMD
Q5
BC846ALT1SMD
Q4
BC846ALT1SMD
Q3
10MHz
C4
27p
C5
27p
C6
10uF
D3
JP2
D4
ES2D
R1
4k7
R2
4k7
R15
1k
R20
1k
R21
1k
R16
27
R17
27
R18
1k
R19
10k
R14
10k
R13
1k
R11
1k
R12
1k
R7
4k7
R8
4k7
C2
10uF
C7
100n
C3
100n
IC2
GND
+5V