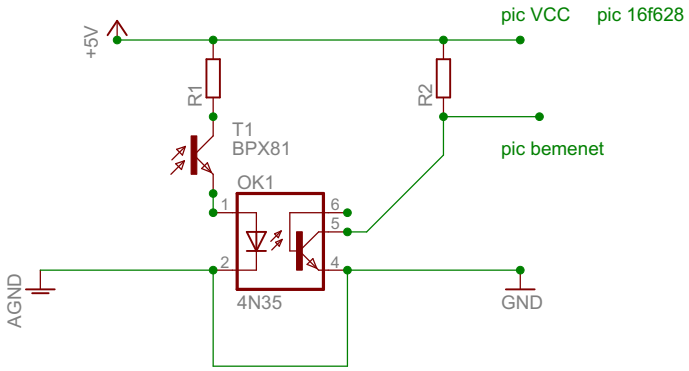
pic VCC
pic 16f628
+5V
R1
R2
T1
BPX81
pic bemenet
OK1
1
6
5
2
4
4N35
AGND
GND