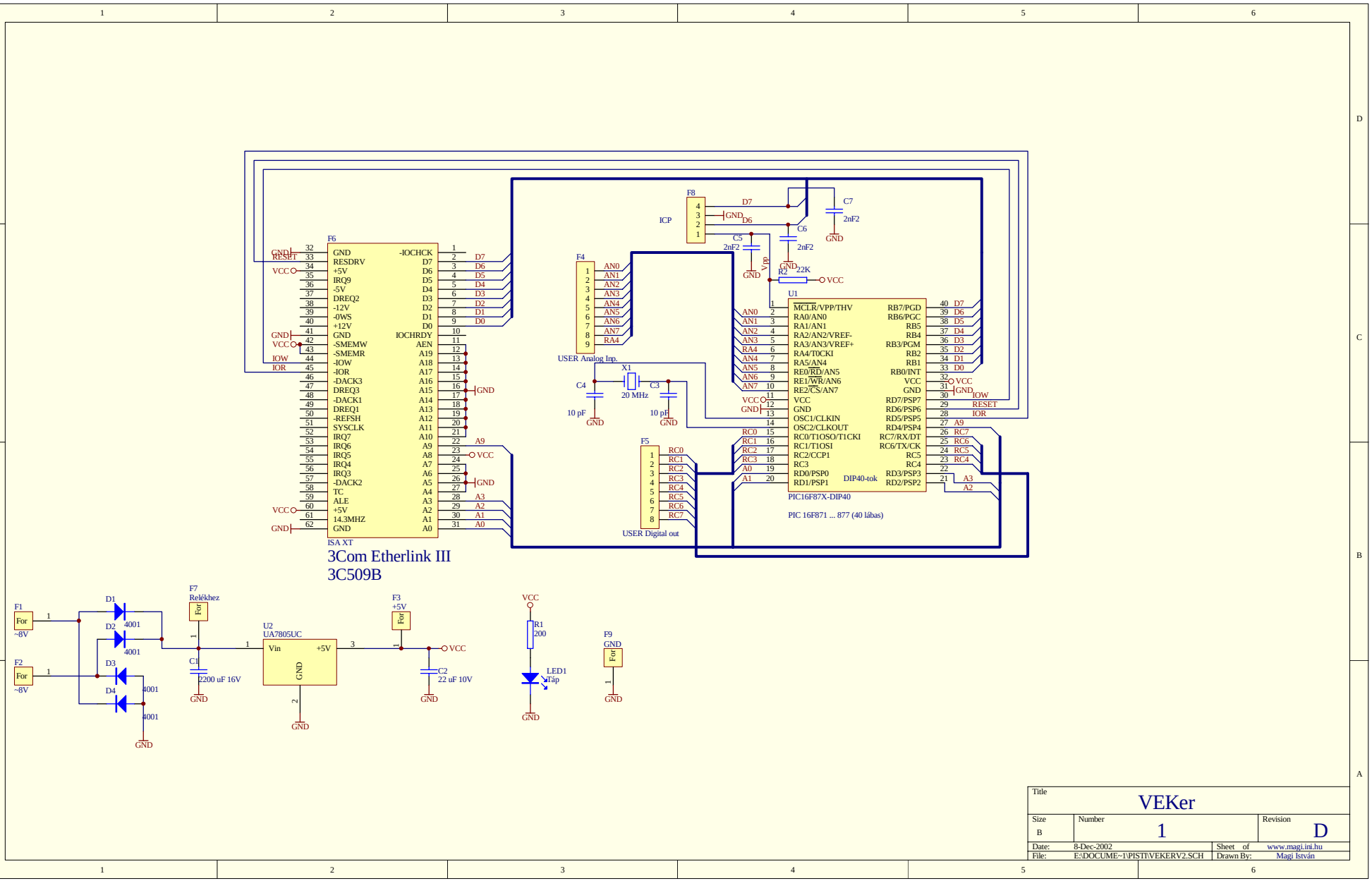

Title	VEKer		
Size B	Number 1		Revision D
Date: 8-Dec-2002		Sheet of	www.magi.ini.hu
File: E:\DOCUME~1\PISTI\VEKERV2.SCH		Drawn By:	Magi István