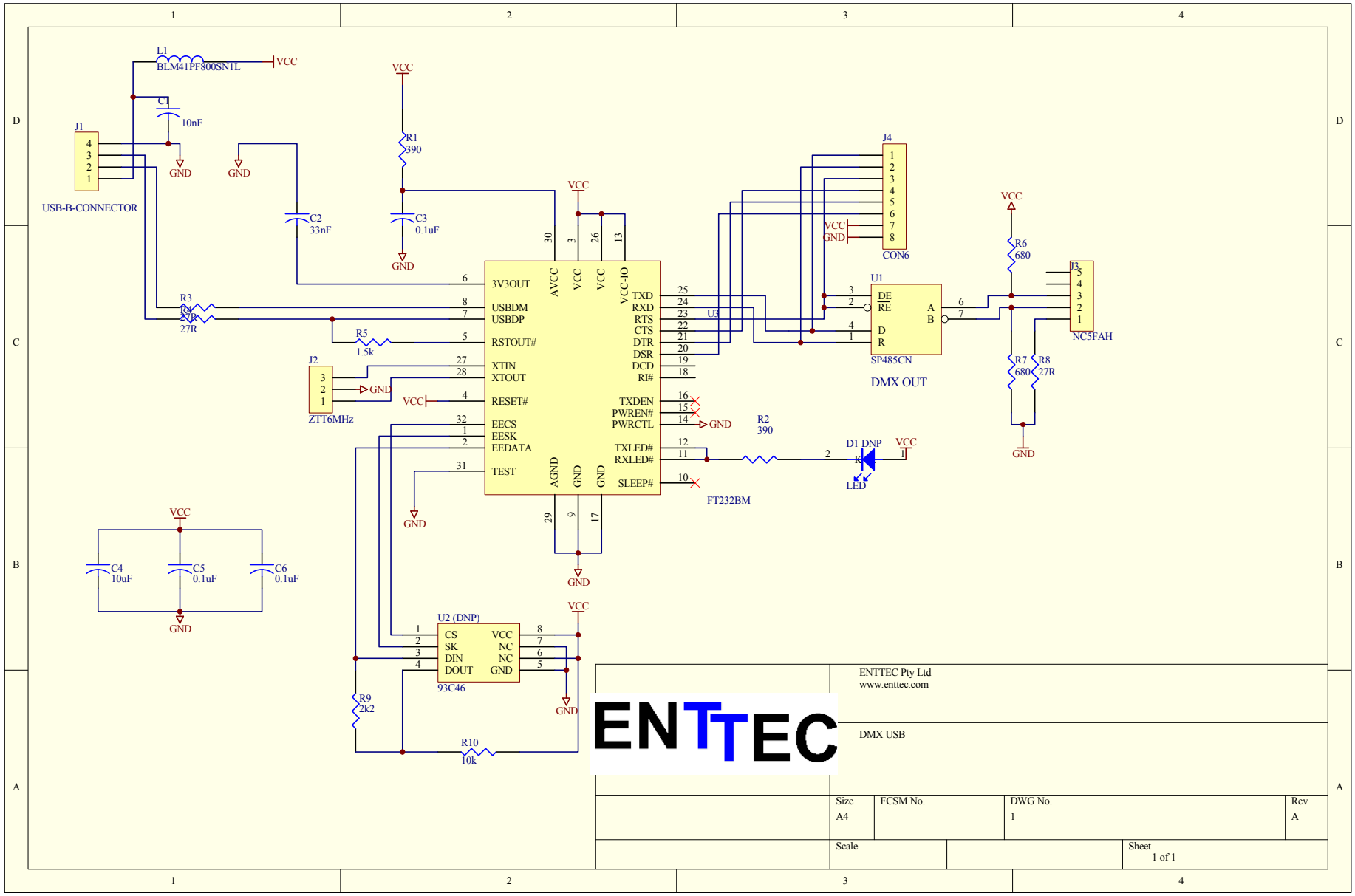


ENTTEC Pty Ltd
www.enttec.com

DMX USB

| Size | FCSM No. | DWG No. | Rev |
|---|---|---|---|
| A4 | | 1 | A |

Scale

Sheet 1 of 1