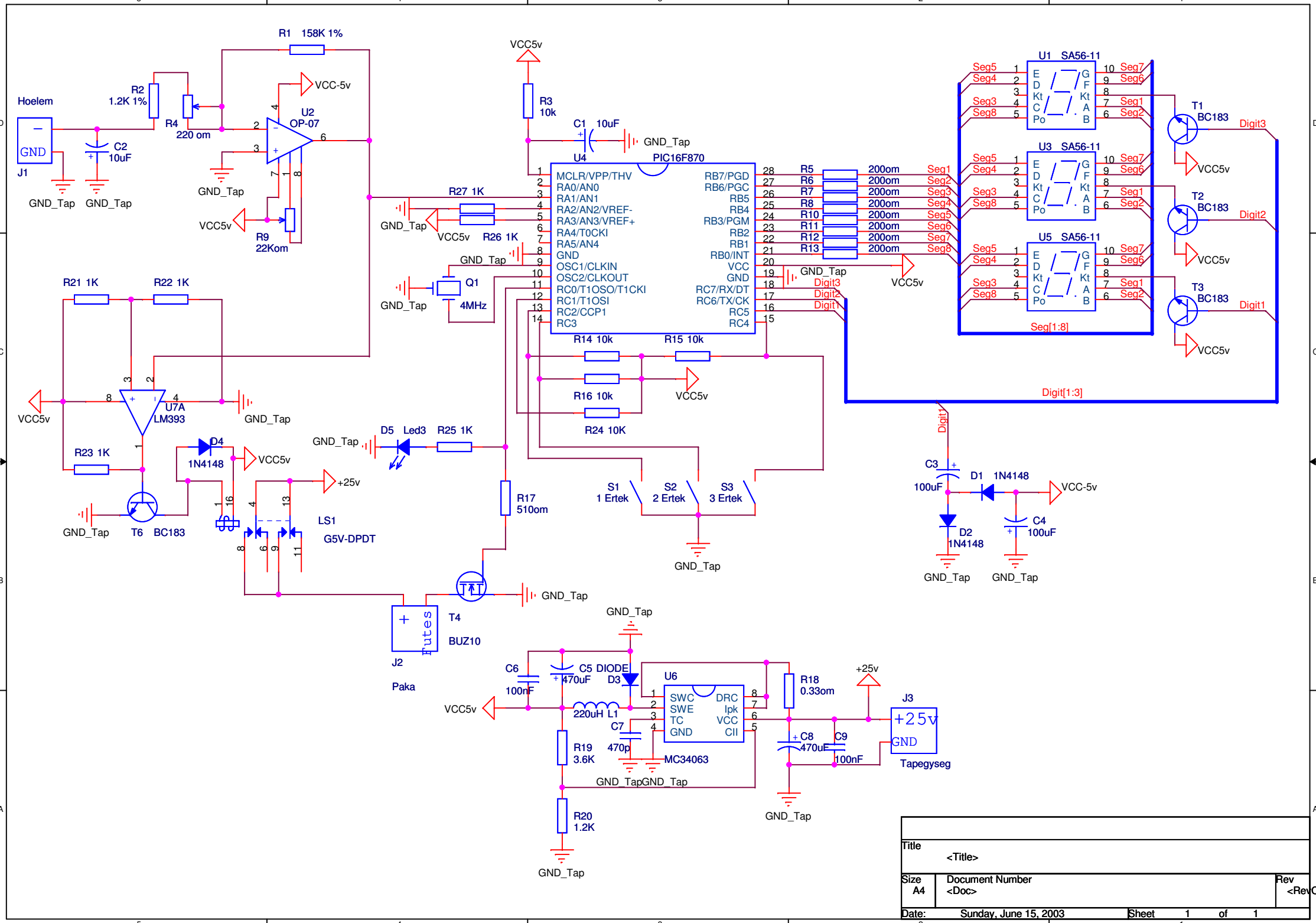
R1 158K 1%
R2 1.2K 1%
R4 220 om
U2 OP-07
VCC-5v
Hoelem
GND
J1
C2 10uF
GND_Tap
R9 22Kom
VCC5v
R3 10k
C1 10uF
U4 PIC16F870
MCLR/VPP/THV
RA0/AN0
RA1/AN1
RA2/AN2/VREF-
RA3/AN3/VREF+
RA4/T0CKI
RA5/AN4
GND
OSC1/CLKIN
OSC2/CLKOUT
RC0/T1OSO/T1CKI
RC1/T1OSI
RC2/CCP1
RC3
RB7/PGD
RB6/PGC
RB5
RB4
RB3/PGM
RB2
RB1
RB0/INT
VCC
GND
RC7/RX/DT
RC6/TX/CK
RC5
RC4
R27 1K
R26 1K
Q1 4MHz
R14 10k
R15 10k
R16 10k
R24 10K
R5 200om
R6 200om
R7 200om
R8 200om
R10 200om
R11 200om
R12 200om
R13 200om
Seg1
Seg2
Seg3
Seg4
Seg5
Seg6
Seg7
Seg8
Digit1
Digit2
Digit3
U1 SA56-11
U3 SA56-11
U5 SA56-11
Seg[1:8]
Digit[1:3]
T1 BC183
T2 BC183
T3 BC183
R21 1K
R22 1K
U7A LM393
R23 1K
T6 BC183
D4 1N4148
D5 Led3
R25 1K
LS1 G5V-DPDT
+25v
R17 510om
S1 1 Ertek
S2 2 Ertek
S3 3 Ertek
C3 100uF
D1 1N4148
C4 100uF
D2 1N4148
T4 BUZ10
J2 Paka
Futes
C6 100nF
C5 470uF
DIODE D3
220uH L1
C7 470p
U6 MC34063
SWC
SWE
TC
GND
DRC
Ipk
VCC
CII
R18 0.33om
C8 470uF
C9 100nF
J3 Tapegyseg
R19 3.6K
R20 1.2K
Title
<Title>
Size A4
Document Number
<Doc>
Rev
<RevCo
Date: Sunday, June 15, 2003
Sheet 1 of 1